CHAPTER 13

POWER FLOW MODELING OF HYBRID AC/DC SYSTEMS

Jef Beerten
Research Group Electa, Department of Electrical Engineering, University of Leuven, Leuven, Belgium

13.1 INTRODUCTION

Power flow software is typically used to analyze steady-state interactions in power systems and to study the flow patterns in the system. When used to study the interactions in hybrid AC/DC power systems, it is possible to study the system-wide effect of converter outages and other contingencies in the HVDC grid by including the overall droop control law in the description of the problem. When solving the power flows in hybrid AC/DC power systems consisting of both AC and DC systems, different types of models can be used. In its simplest form, the DC system can be represented as injections to the AC system, thereby only including very limited or no information on the DC system quantities (e.g., voltages, currents, and line flows). For the detailed models, a general distinction can be made between unified and sequential power flow solution methods. In the unified methods, all AC and DC equations are solved simultaneously in one iterative run. In the sequential solution method, the AC and DC systems are solved sequentially.

A generalized picture of a hybrid AC/DC system is depicted in Figure 13.1. For convenience, the AC and DC bus numbers forming the interconnections to respectively the DC and the AC network have been sequentially numbered, starting from 1. Neither the AC nor DC systems have to be limited to these interconnected buses. In this example, AC systems 3 and 4 only share one converter with respectively DC grids 1 and 2. These systems can represent relatively small systems—for example, island systems or (offshore) wind farms connected to the offshore systems—but they can also represent larger AC systems that only have one interconnection with the other AC systems in the grid.

HVDC Grids: For Offshore and Supergrid of the Future, First Edition. By Dirk Van Hertem, Oriol Gomis-Bellmunt, and Jun Liang.
© 2016 The Institute of Electrical and Electronics Engineers, Inc. Published 2016 by John Wiley & Sons, Inc.

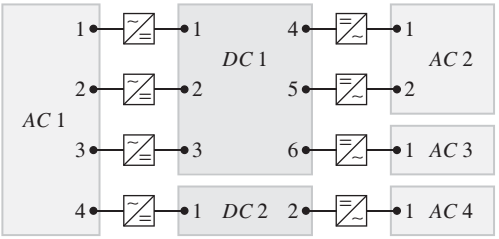

Figure 13.1 Interconnected AC/DC system.

13.2 SIMPLIFIED POWER FLOW MODELING

13.2.1 AC Power System Model

The power flow model of AC systems is well known from the literature [1, 2] and is only briefly introduced here for completeness.

The AC system can be represented by a number of nodes i where the generators and loads are connected, along with a connecting set of branches ij connecting the nodes. The problem is defined in terms of complex nodal voltage, $U_i\angle\theta_i$, and the apparent power injection, $S_{ij} = P_{ij} + jQ_{ij}$, in each node.

The nodes are typically subdivided into three types: the PV buses where the voltage and active power set-point are fixed or given, the PQ buses where active and reactive power are constant, and the slack bus which has a fixed reference angle and voltage.

The transmission lines are modeled as π-equivalent elements. The line between nodes i and j is represented by a series impedance $Z_{ij} = R_{ij} + jX_{ij}$ and a shunt

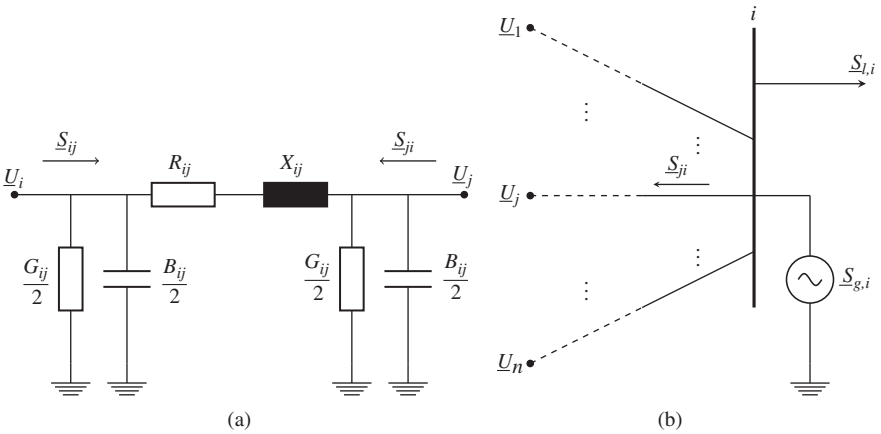

Figure 13.2 Representation of a transmission line and an AC node. (a) π-equivalent for a transmission line. (b) AC node i.

conductance G_{ij} and admittance B_{ij} The grid can than be represented by a nodal admittance matrix, Y_{bus}.

$$y_{bus,ij} = \begin{cases} \frac{1}{Z_{ij}}, & \text{when between nodes } i \text{ and } j \\ -\sum_{\substack{j=1 \\ j\neq i}}^{n} \frac{1}{Z_{ij}} \end{cases} \tag{13.1}$$

The power flow equations can then be written as a sum of the injections of generation $(P_{g,i}, Q_{g,i})$ and load $(P_{l,i}, Q_{l,i})$ and the sum of the branch flow towards that node $(P_{\Sigma br,i}, Q_{\Sigma br,i})$, which equal zero. For node i this gives

$$\begin{aligned} 0 &= P_{l,i} - P_{g,i} + P_{\Sigma br,i} \\ &= P_{l,i} - P_{g,i} + \sum_{j=1}^{n_b} Y_{bus,ij} U_i U_j \cos(\theta_i - \theta_j - \varphi_{ij}) \end{aligned} \tag{13.2a}$$

$$\begin{aligned} 0 &= Q_{l,i} - Q_{g,i} + Q_{\Sigma br,i} \\ &= Q_{l,i} - Q_{g,i} + \sum_{j=1}^{n_b} Y_{bus,ij} U_i U_j \sin(\theta_i - \theta_j - \varphi_{ij}) \end{aligned} \tag{13.2b}$$

Or in rectangular coordinates:

$$\begin{aligned} 0 &= P_{l,i} - P_{g,i} + P_{\Sigma br,i} \\ &= P_{l,i} - P_{g,i} + \sum_{j=1}^{n_b} U_i U_j (G_{bus,ij} \cos(\theta_i - \theta_j) + B_{bus,ij} \sin(\theta_i - \theta_j)) \end{aligned} \tag{13.3a}$$

$$\begin{aligned} 0 &= Q_{l,i} - Q_{g,i} + Q_{\Sigma br,i} \\ &= Q_{l,i} - Q_{g,i} + \sum_{j=1}^{n_b} U_i U_j (G_{bus,ij} \sin(\theta_i - \theta_j) - B_{bus,ij} \cos(\theta_i - \theta_j)) \end{aligned} \tag{13.3b}$$

When expressing the active and reactive power balance for each node as a function of the nodal voltages and angles as in (13.2a) (or (13.3a)) and (13.2b) (or (13.3b)), a system of nonlinear equations is obtained. This system is typically solved in an iterative manner, using the Newton–Raphson method:

$$\begin{bmatrix} \mathbf{\Delta P} \\ \mathbf{\Delta Q} \end{bmatrix}^{(i)} = \begin{bmatrix} \frac{\partial P}{\partial \theta} & U\frac{\partial P}{\partial U} \\ \frac{\partial Q}{\partial \theta} & U\frac{\partial Q}{\partial U} \end{bmatrix}^{(i)} \cdot \begin{bmatrix} \mathbf{\Delta \theta} \\ \frac{\mathbf{\Delta U}}{\mathbf{U}} \end{bmatrix}^{(i)} \tag{13.4}$$

13.2.2 DC Power System Model

In its most simple format, the DC system model can be limited to its overall effects on the AC systems to which it is connected. The DC system can then be represented as mere power injections into the AC system. This model is generally used to represent two-terminal systems in system studies, and it starts from the observation that for these studies the actual variables of the DC system are of lesser importance than the overall effects the HVDC system has on the AC system.

Figure 13.3 Simplified two-terminal HVDC model.

Figure 13.3 shows the model, which can be used to represent the two-terminal system 2 from Figure 13.1.

Neglecting the HVDC system losses, the HVDC system can conceptually be represented as two coupled generators with opposite power injections, where the AC injections at the point of common coupling (PCC), P_s, are equal in magnitude and opposite in sign

$$P_{s_2} = -P_{s_1} \tag{13.5}$$

Alternatively, DC system losses can be added to the model by having

$$P_{s_2} = -P_{s_1} - P_{DC,loss} \tag{13.6}$$

The losses can be assumed constant or can, for example, be a function of the converter power or the line current.

As discussed in greater detail in the next section, the model can be extended by accounting for the fact that reactive power injections (or alternatively the AC system voltages at the PCC) can be independently controlled by the two converters.

The simplified modeling approach can be used to represent more general DC systems, as shown for an n-terminal system in Figure 13.4. Neglecting the DC system losses, similarly to (13.5), the power injections at the PCC have to satisfy

$$\sum_{j=1}^{n} P_{s_j} = 0. \tag{13.7}$$

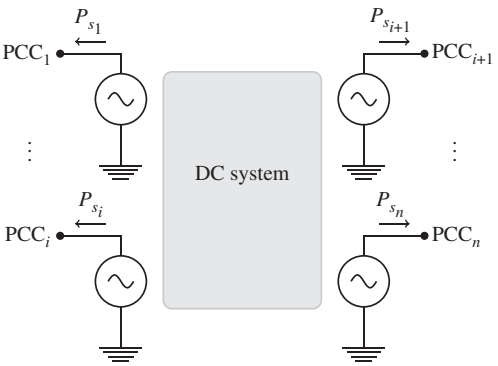

Figure 13.4 Simplified HVDC system model.

In analogy to (13.6), the model can be enhanced by including the DC system losses

$$\sum_{j=1}^{n} P_{s_j} = -P_{DC,loss} \tag{13.8}$$

The converter losses can be taken into account using a generalized loss formula with the converter losses quadratically depending on the converter current I_c [3]:

$$P_{loss} = a_i + b_i I_c + (c_i + r_i) I_c^2 \tag{13.9}$$

with

$$I_c = \frac{\sqrt{P_c^2 + Q_c^2}}{U_c} \tag{13.10}$$

the current of the generator on the AC side of the corresponding converter.

The factors a_i, b_i, and c_i stand for the individual loss factors of converter i. The content of the individual factors is:

- **No-Load Loss Factor a_i.** No-load losses of transformers, averaged auxiliary equipment losses (i.e., lightning, heating, cooling, control systems).
- **Linear Current Factor b_i.** Switching losses of the valves, more in particular the turn-off losses of the IGBTs and free-wheeling diodes.
- **Square Current Factor c_i.** Conduction losses of the valves. In the case where significant differences exist between the rectifier and inverter mode, c_i can depend on the operating mode.
- **Square Current Factor[1] r_i.** Load losses of transformers, series reactance, and other AC equipment.

Example values for the converter loss coefficients a, b and c of a 600-MW ±300-kV VSC converter are given in Table 13.1. The contribution of the different terms of (13.9) is discussed in greater detail in [3].

It is clear that the more complex the DC system becomes, the more challenging it gets to approximate the overall system losses as a function of the PCC power injections. Furthermore, by simplifying the DC system to its power injections into the AC system, all information on the DC system itself is lost, which makes this simple model insufficient for, for example, DC system contingency studies.

TABLE 13.1 Per Unit Converter Loss Coefficients

	a ($\times 10^3$)	b ($\times 10^3$)	c ($\times 10^3$)
Rectifier	11.033	3.464	4.400
Inverter	11.033	3.464	6.667

[1]Please note that this additional term should only be included when this AC equipment is not explicitly represented in the power flow model.

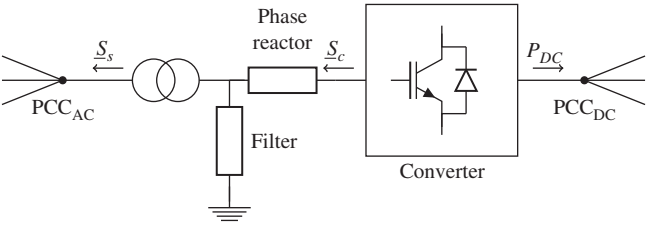

Figure 13.5 VSC-HVDC converter station.

13.3 DETAILED POWER FLOW MODELING

13.3.1 Converter Model

A general representation of a VSC-HVDC converter station, showing the different components, is depicted in Figure 13.5. As seen from the PCC in the AC system, the different components are:

- The converter transformer
- The AC filter
- The phase reactor
- The converter

The filtering requirements are dependent on the technology and on the switching method used to synthesize the converter voltage $\underline{U}_c$. Their effect at the fundamental grid frequency can typically be represented by a shunt capacitor. Recent developments in VSC HVDC technology based on multimodular converters (MMC) allow to strongly reduce or even eliminate the need of low-pass filtering.

As a result, in its most general format, a VSC-HVDC converter can be represented by a controllable voltage source $\underline{U}_c = U_c\angle\theta_c$ behind the phase reactor with a complex impedance $\underline{Z}_c = R_c + jX_c$. As shown in Figure 13.6, the phase reactor is connected to the susceptance B_f, which forms a part of the low-pass filter. The filter bus is connected to the AC grid through a transformer, represented by its impedance $\underline{Z}_{tf} = R_{tf} + jX_{tf}$. The equations for the power flowing to the AC network, following

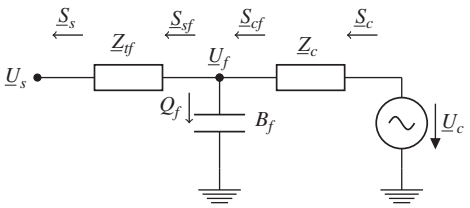

Figure 13.6 Equivalent single-phase power flow model of a converter station connected to the AC grid.

the standard power flow formulation, can thus be written as

$$P_s = -U_s^2 G_{tf} + U_s U_f [G_{tf} \cos(\theta_s - \theta_f) + B_{tf} \sin(\theta_s - \theta_f)] \tag{13.11}$$

$$Q_s = U_s^2 B_{tf} + U_s U_f [G_{tf} \sin(\theta_s - \theta_f) - B_{tf} \cos(\theta_s - \theta_f)] \tag{13.12}$$

with $\underline{U}_s = U_s \angle \theta_s$ and $\underline{U}_f = U_f \angle \theta_f$ respectively the complex grid side and filter bus voltage. The equations at the converter side can be written as

$$P_c = U_c^2 G_c - U_f U_c [G_c \cos(\theta_f - \theta_c) - B_c \sin(\theta_f - \theta_c)] \tag{13.13}$$

$$Q_c = -U_c^2 B_c + U_f U_c [G_c \sin(\theta_f - \theta_c) + B_c \cos(\theta_f - \theta_c)] \tag{13.14}$$

Assuming the AC filters to be lossless, the filter power reduces to its reactive part

$$Q_f = -U_f^2 B_f \tag{13.15}$$

while the expressions for the filter side complex power flowing through the transformer are written as

$$P_{sf} = U_f^2 G_{tf} - U_f U_s [G_{tf} \cos(\theta_s - \theta_f) - B_{tf} \sin(\theta_s - \theta_f)] \tag{13.16}$$

$$Q_{sf} = -U_f^2 B_{tf} + U_f U_s [G_{tf} \sin(\theta_s - \theta_f) + B_{tf} \cos(\theta_s - \theta_f)] \tag{13.17}$$

and those flowing through the phase reactor side are

$$P_{cf} = -U_f^2 G_c + U_f U_c [G_c \cos(\theta_f - \theta_c) + B_c \sin(\theta_f - \theta_c)] \tag{13.18}$$

$$Q_{cf} = U_f^2 B_c + U_f U_c [G_c \sin(\theta_f - \theta_c) - B_c \cos(\theta_f - \theta_c)] \tag{13.19}$$

In the absence of low-pass filters or with the filters omitted, the phase reactor and the converter transformer can be lumped together, eliminating the dependence on the complex filter bus voltage in (13.11)–(13.14). Similarly, if transformerless designs are considered, the filter bus and the AC grid bus coincide, hence simplifying the equations. These different representations are found in Figure 13.7. Figure 13.7c shows a representation that is generally used as a simplified model of a converter, namely a voltage source behind a complex impedance (or a pure inductive impedance when also omitting R_c). In that case, the power flow equations at the grid side simplify to

$$P_s = -U_s^2 G_c + U_s U_c [G_c \cos(\theta_s - \theta_c) + B_c \sin(\theta_s - \theta_c)] \tag{13.20}$$

$$Q_s = U_s^2 B_c + U_s U_c [G_c \sin(\theta_s - \theta_c) - B_c \cos(\theta_s - \theta_c)] \tag{13.21}$$

and the power flowing to the AC network at the converter end can then be written as

$$P_c = U_c^2 G_c - U_s U_c [G_c \cos(\theta_s - \theta_c) - B_c \sin(\theta_s - \theta_c)] \tag{13.22}$$

$$Q_c = -U_c^2 B_c + U_s U_c [G_c \sin(\theta_s - \theta_c) + B_c \cos(\theta_s - \theta_c)] \tag{13.23}$$

This representation is commonly used to represent a connection of a VSC, and for the majority of system studies, this representation is sufficient to represent the converters. This especially holds for MMC converters with small AC filters or even without AC filters. As discussed in Section 13.3.3, leaving out the filters for a two-level topology results in an underestimation of the converter reactive power capability at the PCC.

The converter losses can be taken into account by the loss function (13.9).

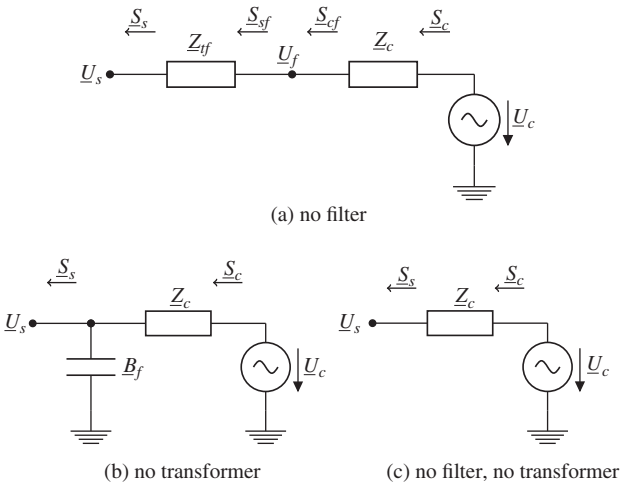

Figure 13.7 Single-phase model of a converter station. (a) Omitting the filter, (b) omitting the transformer, and (c) omitting both filter and transformer.

13.3.2 Control Mode Representation

A VSC HVDC converter can independently control the active and reactive power injection with respect to the AC system. The active power injection is modeled in different ways:

1. *Constant P*. The converter has a constant active power injection P_s into the AC grid.
2. *Constant* U_{DC}. The algorithm adapts the active power injection P_s to obtain a constant DC bus voltage U_{DC}.
3. $P - U_{DC}$ *Droop*. The actual active power injection depends on the DC bus voltage U_{DC} according to the droop characteristic

$$P_{DC} = P_{DC,0} - \frac{1}{k_{DC}}(U_{DC} - U_{DC,0}) \tag{13.24}$$

Figure 13.8 shows the *P–U* steady-state characteristics for these three control options.

Alternatively, the DC current can be controlled to a constant value and consequentially, the voltage droop characteristic can also be written as a function of the converter current. The characteristics from Figure 13.8 can also be combined to a so-called voltage-margin control or deadband droop control, or a piecewise-linear droop curve as discussed in greater detail in Chapter 15. This will not be treated further in this chapter and the description will be limited to a representation of the three control options shown in Figure 13.8.

The ability of the converter to independently control the reactive power results in two different representations in the power flow algorithm:

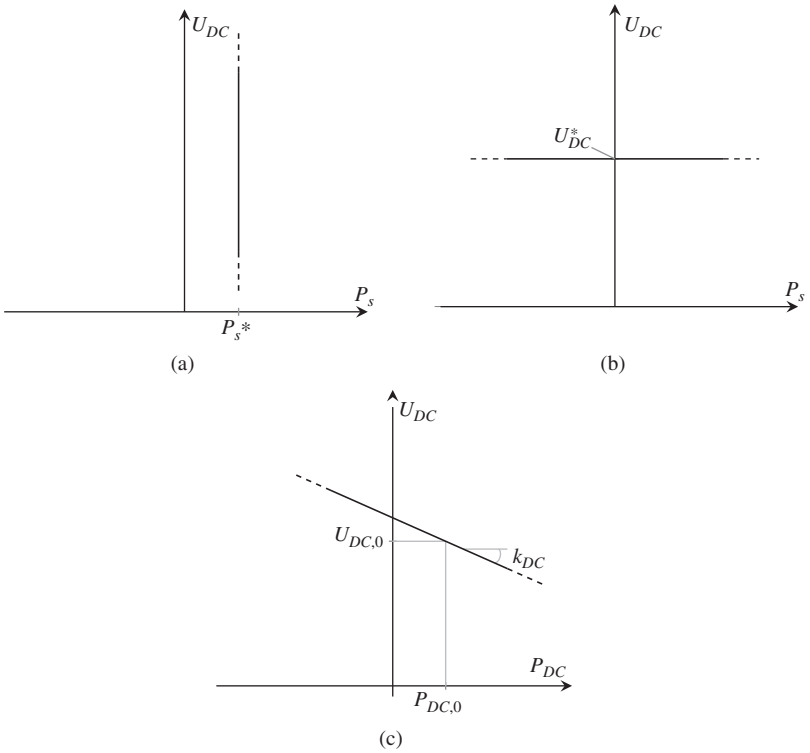

Figure 13.8 Converter steady-state operation characteristics. (a) P constant. (b) U_{DC} constant. (c) P–U_{DC} droop.

1. *Constant Q*: The converter has a constant reactive power injection Q_s into the AC grid.
2. *Constant U*: The converter adapts the reactive power injection to obtain a constant AC bus voltage magnitude U_s.

13.3.2.1 Two-Terminal Scheme The actual steady-state behaviour of a two-terminal VSC-HVDC link can be modeled in a power flow algorithm by one constant P converter and one constant U_{DC} converter. The active power injection of the latter is unknown prior to the power flow and depend on the losses in the VSC-HVDC system. This constant U_{DC} converter is referred to as the DC slack converter, due to its similarity to the slack bus in AC power flow algorithms.

13.3.2.2 Multi-Terminal Scheme The two-terminal representation can be extended to model x different MTDC systems with a total of y DC converters. With one DC slack bus per MTDC system, this results in y–x converters controlling their active power output (constant P). The x remaining DC slack converters, one per MTDC system, adjust their power to account for the DC system losses and to keep up the voltage of the DC grids.

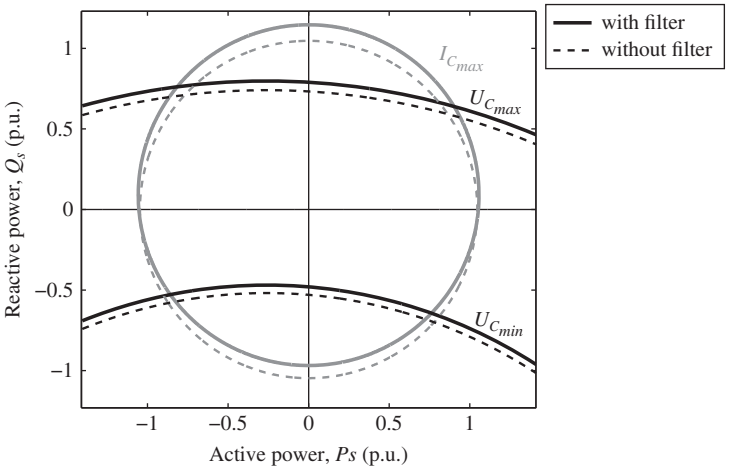

Figure 13.9 PQ-capability chart. Converter station current and voltage limits (with $I_{c_{max}} = 1.05$ p.u., $U_{c_{min}} = 0.85$ p.u., and $U_{c_{max}} = 1.2$ p.u.).

Alternatively, a voltage droop can be implemented to study the effect of distributing the DC voltage control function on the power flows. Doing so, the converters can be represented by (13.24), possibly combined with converters in constant power control representing, for example, offshore wind farms.

13.3.3 Converter Limits

To ensure an overall safe operation of the converter station, the steady-state working point must be situated within the PQ-capability chart of the converter, depicted in Figure 13.9.[2] The solid lines include the effect of the filters, and the dotted lines neglect the filters. The gray circle forms the converter current limit. The black arcs depict the upper and lower converter voltage limits. The PQ capability of the converter is given by the area inside these limits.

With the apparent power injection written as

$$\underline{S}_s = \underline{U}_s \underline{I}_s^* \tag{13.25}$$

the system bus voltage equation, which is equal to

$$\underline{U}_s = \underline{U}_f - \underline{Z}_{tf} \underline{I}_s \tag{13.26}$$

can be reformulated and substituted in the equation for the current at the filter bus, yielding

$$\underline{I}_s = \underline{I}_c - \frac{\underline{U}_s + \underline{Z}_{tf} \underline{I}_s}{\underline{Z}_f} \tag{13.27}$$

[2]See also Section 10.5.2: power capability curve.

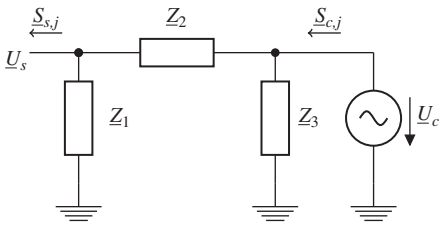

Figure 13.10 π-equivalent scheme of a VSC-HVDC converter.

Rewriting this equation in terms of the current $\underline{I}_s$ and substituting it in (13.25) results in a closed expression of the converter current limit

$$\underline{S}_s = -U_s^2 \left(\frac{1}{\underline{Z}_f^* + \underline{Z}_{tf}^*} \right) + \underline{U}_s \underline{I}_{cm}^* \left(\frac{\underline{Z}_f^*}{\underline{Z}_f^* + \underline{Z}_{tf}^*} \right) \tag{13.28}$$

with $\underline{I}_{cm}$ the phasor of the maximum current

$$\underline{I}_{cm} = I_{c_{max}} \angle \theta_{I_c} \tag{13.29}$$

With the filters omitted, (13.28) simplifies to

$$\underline{S}_s = \underline{U}_s \underline{I}_{cm}^* \tag{13.30}$$

As shown in Figure 13.9, the circular current limit from (13.30) slightly scales and shifts to a new center point as a result of the filter inclusion. The filter capacitance thus leads to a small bias in Q_s-axis direction [4].

In VSC systems that use pulse-width modulation (PWM), the modulation factor has an upper and lower limit, respectively, to avoid overmodulation and the reappearance of harmonics. In [5], the lower reactive power limit is a constant at −0.5 p.u, which corresponds with the lower limit in this picture. With the modular multilevel converter (MMC) technology, the reactive power is limited by the current in the lagging region [6]. The lower voltage limit can thus be omitted in this case.

These limits are implemented as limits on the converter voltage. The voltage limits can be obtained by applying a Y–θ transformation to the equivalent model from Figure 13.6. This is shown in Figure 13.10, with the equivalent impedances $\underline{Z}_1$, $\underline{Z}_2$ and $\underline{Z}_3$, respectively:

$$\underline{Z}_1 = \frac{\underline{Z}_{tf}\underline{Z}_c + \underline{Z}_c\underline{Z}_f + \underline{Z}_f\underline{Z}_{tf}}{\underline{Z}_c} \tag{13.31}$$

$$\underline{Z}_2 = \frac{\underline{Z}_{tf}\underline{Z}_c + \underline{Z}_c\underline{Z}_f + \underline{Z}_f\underline{Z}_{tf}}{\underline{Z}_f} \tag{13.32}$$

$$\underline{Z}_3 = \frac{\underline{Z}_{tf}\underline{Z}_c + \underline{Z}_c\underline{Z}_f + \underline{Z}_f\underline{Z}_{tf}}{\underline{Z}_{tf}} \tag{13.33}$$

Rewriting $\underline{I}_s^*$ in (13.25) in terms of the currents $\underline{I}_1$ and $\underline{I}_2$, through $\underline{Z}_1$ and $\underline{Z}_2$, results in

$$\underline{S}_s = \underline{U}_s \cdot \left(\underline{I}_2^* - \underline{I}_1^*\right) \tag{13.34}$$

$$= \underline{U}_s \cdot \left(\frac{\underline{U}_c^* - \underline{U}_s^*}{\underline{Z}_2^*} - \frac{\underline{U}_s^*}{\underline{Z}_1^*}\right) \tag{13.35}$$

Rewriting this equation in terms of admittances results in the expression for $\underline{S}_s$ in terms of a converter voltage limit

$$\underline{S}_s = -U_s^2 \cdot \left(\underline{Y}_1^* + \underline{Y}_2^*\right) + \underline{U}_s \cdot \underline{U}_{cm}^* \cdot \underline{Y}_2^* \tag{13.36}$$

with $\underline{U}_{cm}$ the phasor of the minimum or maximum converter voltage $U_{c_{min}}$ or $U_{c_{max}}$. $U_{c_{max}}$ is the maximum voltage that can be generated by the converter while avoiding overmodulation. This approach implicitly assumes a constant DC voltage when calculating the limits. Alternatively, the modulation index can be included explicitly in the equations, as in [7]. The lower voltage limit $U_{c_{min}}$ in Figure 13.9 has been chosen to comply with the minimum reactive power limit from [5]. This limit can be omitted in an MMC or when no minimum reactive power limit is imposed on the converter.

Similar expressions can be found by applying l'Hôpital's rule to (13.31)–(13.33) for $\underline{Z}_f \to \infty$ or $\underline{Z}_{tf} \to 0$ when the filter or transformer are not included. The expression without the filter hence simplifies to

$$\underline{S}_s = -U_s^2 \left(\frac{1}{\underline{Z}_{tf}^* + \underline{Z}_c^*}\right) + \frac{\underline{U}_s \underline{U}_{cm}^*}{\underline{Z}_{tf}^* + \underline{Z}_c^*} \tag{13.37}$$

Similar to the current limit, the inclusion of the filter shifts the voltage limit circles from (13.30) to a new center point, while their radii slightly change.

13.3.4 DC Grid Model

The power flows in the DC grid can be obtained in a way similar to a conventional AC power flow. The current injected at a DC node i can be written as the current flowing to the other $n-1$ nodes in the network

$$I_{DC_i} = \sum_{\substack{j=1 \\ j \neq i}}^{n} Y_{DC_{ij}} \cdot \left(U_{DC_i} - U_{DC_j}\right) \tag{13.38}$$

with $Y_{DC_{ij}}$ equal to $1/R_{DC_{ij}}$.

Combining all currents injected in an n bus DC network results in

$$I_{DC} = \mathsf{Y}_{\mathsf{DC}} U_{DC} \tag{13.39}$$

with $I_{DC} = [I_{DC_1}, I_{DC_2} \dots I_{DC_k}, 0 \dots 0]^T$ the DC current vector with $n-k$ zero elements due to DC buses without a power injection and converter outages. The vector $U_{DC} = [U_{DC_1}, U_{DC_2} \dots U_{DC_n}]^T$ denotes the DC voltage vector, and Y_{DC} denotes the DC bus matrix. When line outages are taken into account, the DC bus matrix needs to

be updated accordingly. When x DC grids are considered, all DC bus matrices $\mathsf{Y}_{\mathsf{DC}j}$ of the different DC grids are combined in one single sparse band matrix Y_{DC}

$$\mathsf{Y}_{\mathsf{DC}} = \begin{bmatrix} \mathsf{Y}_{\mathsf{DC}1} & & \\ & \ddots & \\ & & \mathsf{Y}_{\mathsf{DC}x} \end{bmatrix} \tag{13.40}$$

The active power injected in node i can be written as

$$P_{DC_i} = U_{DC_i} I_{DC_i}, \qquad \forall i \leq k, \tag{13.41}$$

The current injections I_{DC} are not known prior to the power flow solution for the DC grid, whereas the active power injections P_{DC} are known for all buses as a results of the AC power flow, except for the DC slack and voltage droop buses. Combining (13.39) and (13.41), we obtain

$$P_{DC_i} = U_{DC_i} \sum_{\substack{j=1 \\ j \neq i}}^{n} Y_{DC_{ij}} \cdot \left(U_{DC_i} - U_{DC_j}\right) \tag{13.42}$$

In the case of a U_{DC}–P_{DC} voltage droop, the relationship between the active power and the DC voltage is written as

$$P_{DC_i} = P_{DC,0_i} - \frac{1}{k_{DC_i}} \left(U_{DC_i} - U_{DC,0_i}\right) \tag{13.43}$$

13.4 SEQUENTIAL AC/DC POWER FLOW

To solve the hybrid AC/DC system in steady state, a distinction can be made between unified models on the one hand and sequential models on the other hand. The distinction is based on the solution method: Unified methods solve the entire hybrid AC/DC system in one iterative run, whereas the sequential methods iterate between the AC and DC systems. Unified methods have the advantage that, in general, they need less calculation time, since they solve both systems at the same time. On the one hand, additional iterations between the AC and the DC systems in sequential methods may give rise to convergence problems due to oscillations between the AC and DC system solutions. On the other hand, sequential methods have the advantage that they can easily be combined with existing AC power flow packages. In the remainder of the chapter, focus will largely be on the sequential approach. However, the converter and DC system equations derived in the previous sections can equally well be used in unified methods. More information on unified solutions of hybrid AC/DC systems can be found in [8, 9].

Figure 13.11 shows the flow chart of a sequential power flow algorithm. Prior to solving the power flow, the algorithm starts with a pre-processing, including amongst others a per unit conversion and an internal bus renumbering. It is assumed in the remainder of the chapter that interconnected AC and DC buses have the same bus number. For convenience, the analysis will be confined to one AC grid and one DC

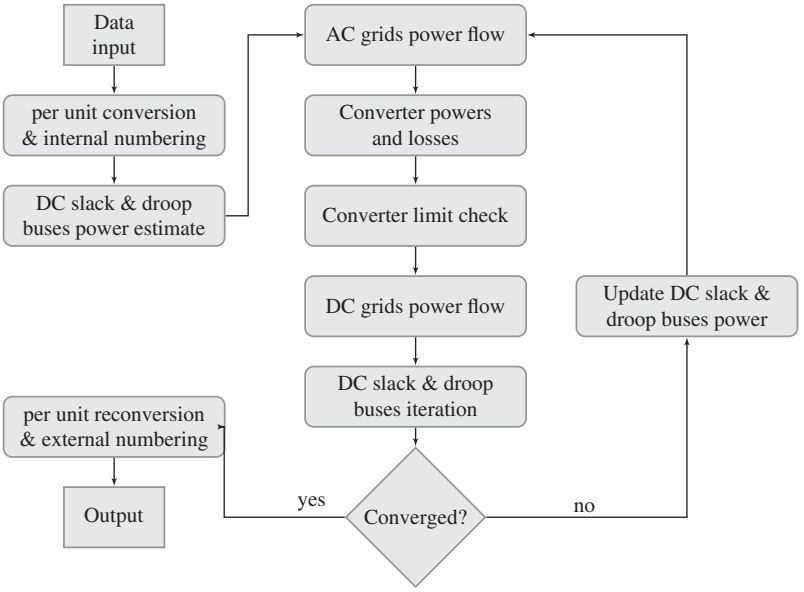

Figure 13.11 Flow chart of the sequential VSC-AC/DC power flow algorithm.

grid with n buses of which k have a connection to the AC grids. The method can easily be extended to include multiple AC and DC grids.

13.4.1 Initialization

To start the iteration, the system needs a first approximation of the converter active power injections, which can be done by assuming a lossless DC system and converters. Assuming the first converter to operate as a slack node in the DC system,[3] without lack of generality, we can write the vector of AC power injections as

$$P_s = [\underbrace{P_{s_1}}_{\text{slack}}, \underbrace{P_{s_2} \dots P_{s_m}}_{\text{voltage droop}}, \underbrace{P_{s_{m+1}} \dots P_{s_k}}_{P-\text{control}}, \underbrace{0 \dots 0}_{\text{outage}}]^T \tag{13.44}$$

The initialization of the active powers is given by

$$P_{s_i}^{(0)} = \begin{cases} -P_{dc,0_i} & \forall i\colon\ 2 \le i \le m \\ P_{s_i} & \forall i\colon\ m+1 \le i \le n \end{cases} \tag{13.45}$$

The active power delivered by the DC slack bus is given by

$$P_{s_1}^{(0)} = -\sum_{i=2}^{m} P_{s_i}^{(0)} - \sum_{j=m+1}^{n} P_{s_j} \tag{13.46}$$

[3]Note that when including a voltage droop at some converters, including a slack node is not strictly needed in order to find a solution. Mathematically, the voltage droop inclusion fulfills a function similar to a distributed slack bus.

or, in the case of multiple converters with a constant voltage,

$$P_{s_h}^{(0)} = -\frac{1}{l}\left(\sum_{i=l+1}^{m} P_{s_i}^{(0)} + \sum_{j=m+1}^{n} P_{s_j}\right) \qquad \forall h\colon\ 1 \le h \le l \tag{13.47}$$

Since multiple DC slack buses in a single DC grid might give rise to divergence in the DC power flow and are not likely to be implemented in real systems, the latter option is not preferred. In general, a DC system can also operate with all converters under droop control.

In the case where the system only has a constant voltage bus (slack node), but no voltage droop at other converters, the first estimate to initiate the iteration is given by

$$P_{s_1}^{(0)} = -\sum_{j=2}^{k} P_{s_j} \tag{13.48}$$

For subsequent iterations, the solution from the previous iteration is used for $P_{s_1}^{(k)}$.

13.4.2 AC Network Power Flow

The power flow equations for bus i in the AC grid can be written using (13.3a) and (13.3b).

The nonlinear set of power flow equations for all AC buses can be solved using a Newton–Raphson power flow, with the converter power injections P_s and Q_s included in the power mismatch vectors $\Delta P^{(j)}$ and $\Delta Q^{(j)}$ as negative loads. The power mismatch vectors can be rewritten as

$$\Delta P_i^{(j)} = P_i^{gen} - \left(P_i^{dem} - P_{s_i}\right) - P_i(U^{(j)}, \theta^{(j)}) \tag{13.49}$$

$$\Delta Q_i^{(j)} = Q_i^{gen} - \left(Q_i^{dem} - Q_{s_i}\right) - Q_i(U^{(j)}, \theta^{(j)}) \tag{13.50}$$

Converters in V-control are represented as dummy AC generators, and their AC buses are changed from PQ-nodes to PV-nodes. The active power injections of the slack buses are changed in order to control the DC grid voltages.

13.4.3 Converter Calculations

With the AC grid voltages $\underline{U}_s$ and power injection at the AC grid side $\underline{S}_s$ known, the converter side voltage and currents can be calculated. With (13.25)–(13.26), the filter bus voltage $\underline{U}_f$ can be written as

$$\underline{U}_{f_i} = \underline{U}_{s_i} + \underline{Z}_{tf_i} \cdot \left(\frac{\underline{S}_{s_i}^*}{\underline{U}_{s_i}^*}\right) \qquad \forall i < k \tag{13.51}$$

The converter current $\underline{I}_c$ can be extracted from (13.27), with $\underline{I}_s$ rewritten using (13.25)

$$\underline{I}_{c_i} = \frac{\underline{U}_{s_i}}{\underline{Z}_{f_i}} + \left(\frac{\underline{S}^*_{s_i}}{\underline{U}^*_{s_i}}\right) \cdot \frac{\underline{Z}_{f_i} + \underline{Z}_{tf_i}}{\underline{Z}_{f_i}} \qquad \forall i < k \tag{13.52}$$

which can be substituted in (13.9) to calculate the converter losses. The converter voltage $\underline{U}_c$ can be calculated as

$$\underline{U}_{c_i} = \underline{U}_{f_i} + \underline{Z}_{c_i}\underline{I}_{c_i}, \qquad \forall i < k \tag{13.53}$$

With all quantities on the AC side known, the DC grid's injected power becomes

$$P_{DC_i} = -P_{c_i} - P_{loss_i}, \qquad \forall i < k \tag{13.54}$$

13.4.4 Converter Limit Check

If the converter is operating outside its limits, the power injections are adapted to ensure a safe operation. In general, a weighting factor can be used to give a higher priority to active or reactive power. In this discussion, priority is given to active power. The grid-injected power P_s can remain unaltered if intersections with the capability chart can be found. If, on the contrary, P_s is too large, the active power is limited to its maximum value and the reactive power is adapted accordingly.

The current and voltage limits in (13.28) and (13.36) are circles in the PQ-plane. Hence, with P_s known, the two reactive power limits imposed by the current limit can be calculated as

$$Q_s = Q_o \pm \sqrt{r^2 - (P_s - P_o)^2} \tag{13.55}$$

with the circle's center $\underline{S}_o = P_o + jQ_o$ and a radius r. The center point and radius of the current limit are given by

$$\underline{S}_o = -U_s^2 \left(\frac{1}{\underline{Z}^*_f + \underline{Z}^*_{tf}}\right) \tag{13.56}$$

$$r = U_s I_{c_{max}} \left|\frac{\underline{Z}^*_f}{\underline{Z}^*_f + \underline{Z}^*_{tf}}\right| \tag{13.57}$$

The two solutions refer to the upper and lower reactive power limit imposed by the current limit.

Similarly, the voltage limits center point and radius are given by

$$\underline{S}_o = -U_s^2 \left(\underline{Y}^*_1 + \underline{Y}^*_2\right) \tag{13.58}$$

$$r = U_s U_{cm} Y_2 \tag{13.59}$$

Replacing U_{cm} in (13.59) with $U_{c_{min}}$ or $U_{c_{max}}$ and substituting (13.58)–(13.59) in (13.55) gives an analytical expression for the lower and upper voltage limit reactive power. Only the solution with the positive sign is of interest, as the other solution refers to the lower crossing point with voltage limit circle.

The limit checks can be implemented similarly to those of generator limits: If a converter is operating outside its active power limits, the set-points must be reduced to their maximum values. Additionally, it must be ascertained that the DC slack buses are working within their bounds. Apart from the active power violations, the converter's reactive power must stay within limits. When a Q-limit is hit, the most stringent reactive power limit imposes the new converter operating point. If the converter is operating in V-control, the voltage controlled bus also has to be changed to a PQ-bus.

The Q-limits of the converters are updated every iteration due to changing grid conditions. As a consequence, it was found that simply enforcing the limits during each iteration proved unsatisfactory due to the fact that the limits differ from one iteration to another as a result of changing AC system voltages. Consequently, this can give rise to convergence problems. A solution to overcome this is to only update the limits when the incremental change in apparent power exceeds a minimum value. Alternatively, the limits can be checked after every iteration and only updated every three iterations. The algorithm should be properly tuned to achieve good convergence.

In summary, the following situations can occur:

- When an **active power controlling converter** has an active power setpoint outside of the PQ-capability chart, the active power order is reduced to comply with the most stringent limit.
- When a **DC voltage droop controlling converter** hits a limit, the converter is set to a constant active power injection equal to the maximum or minimum converter active power limit, depending on the direction of power flow.
- Similarly, when a **reactive power controlling converter** has a reactive power set-point outside of the PQ-capability chart, the reactive power order is reduced to comply with the most stringent limit, provided that no active power limit is hit. If this happens to be the case, the extent to which active power has to be prioritized over reactive power (or vice versa) needs to be defined beforehand.
- When an **AC voltage controlling converter** hits a reactive power limit, the converter is set to a constant reactive power injection determined by the most stringent limit. Similarly to the previous case, the priority of active or reactive power control has to be specified in case the active power limit is hit.

Whether a DC slack converter, if present, can be excluded from the analysis depends on whether changing the representation of the slack converter from constant DC voltage to constant active power still ensures finding a solution to the problem. As pointed out earlier, in the presence of voltage droop-controlled converters, a slack converter is not strictly needed from a mathematical point of view. Alternatively, the slack converter can be checked at the end of the power flow calculation and a redefinition of the power order set-points should be considered when it is observed that a limit is hit in this slack converter.

13.4.5 DC Network Power Flow

13.4.5.1 Constant Power Converters After calculating the AC power flow, all converter powers and losses are calculated to obtain the DC grid's injected powers P_{DC} for the k DC buses to which converters are connected. For converters 2 to k the DC power injection P_{DC} are known as a result of the AC power flow. Assuming that no droop-controlled converters are included in the system, expression (13.44) can be simplified into the following DC active power vector P_{DC}:

$$P_{DC} = [\ \underbrace{P_{DC_1}}_{\text{slack}}, \underbrace{P_{DC_2} \dots P_{DC_k}}_{P\text{-control}}, \underbrace{0 \dots 0}_{\text{outage}}\ ]^T \tag{13.60}$$

The nonlinear DC network equations from (13.42) can be solved with a Newton–Raphson method:

$$\left(U_{DC} \frac{\partial P_{DC}}{\partial U_{DC}} \right)^{(j)} \cdot \frac{\Delta U_{DC}}{U_{DC}}^{(j)} = \Delta P_{DC}^{(j)} \tag{13.61}$$

The power mismatch vector $\Delta P_{DC}^{(j)}$ is given by

$$\Delta P_{DC_i}^{(j)} = \begin{cases} P_{DC_i}^{(k)} - P_{DC_i}\left(U_{DC}^{(j)}\right) & \forall i \leq k \\ -P_{DC_i}\left(U_{DC}^{(j)}\right) & \forall k \leq i \leq n \end{cases} \tag{13.62}$$

with superscripts (j) and (k) respectively referring to the inner Newton–Raphson iteration and the outer AC/DC power flow iteration. The terms of the Jacobian are

$$\left(U_{DC_j} \frac{\partial P_{DC_i}}{\partial U_{DC_j}} \right)^{(j)} = -U_{DC_i}^{(j)} Y_{DC_{ij}} U_{DC_j}^{(j)} \tag{13.63}$$

$$\left(U_{DC_i} \frac{\partial P_{DC_i}}{\partial U_{DC_i}} \right)^{(j)} = P_{DC_i}^{(j)} + U_{DC_i}^{(j)\ 2} \cdot \sum_{\substack{j=1 \\ j \neq i}}^{n} Y_{DC_{ij}} \tag{13.64}$$

The equations and terms corresponding to the slack bus are removed since its voltage is known prior to the DC network power flow. After convergence, the voltages on all DC buses are known, while the slack bus power injection can be found using (13.42).

13.4.5.2 Voltage Droop Converters In the case of voltage droop converters at buses 2 to m, only the DC power injection set-points $P_{DC,0}$ are known at these buses. The problem can now be rewritten by defining a modified active power vector P'_{DC} such that

$$P'_{DC} = [\ \underbrace{P_{DC_1}}_{\text{slack}}, \underbrace{P_{DC,0_2} \dots P_{DC,0_m}}_{\text{voltage droop}}, \underbrace{P_{DC_{m+1}} \dots P_{DC_k}}_{P\text{-control}}, \underbrace{0 \dots 0}_{\text{outage}}\ ]^T \tag{13.65}$$

The DC bus voltages are calculated with a Newton method

$$\left(U_{DC}\frac{\partial P'_{DC}}{\partial U_{DC}}\right)^{(j)} \cdot \frac{\Delta U_{DC}}{U_{DC}}^{(j)} = \Delta P'^{(j)}_{DC} \tag{13.66}$$

with the modified power mismatch vector $\Delta P'^{(j)}_{DC}$ given by

$$\Delta P'^{(j)}_{DC_i} = \begin{cases} P_{DC,0_i} - P_{DC,0_i}\left(U^{(j)}_{DC}\right) & \forall i\colon\ 2 \le i \le m \quad \text{(voltage droop)} \\ P^{(k)}_{DC_i} - P_{DC_i}\left(U^{(j)}_{DC}\right) & \forall i\colon\ m < i \le k \quad (P\text{-control}) \\ -P_{DC_i}\left(U^{(j)}_{DC}\right) & \forall i\colon\ k < i \le n \quad \text{(outage)} \end{cases} \tag{13.67}$$

and $P_{DC,0_i}(U^{(j)}_{DC})$ as

$$P^{(j)}_{DC,0_i} = P_{DC_i}\left(U^{(j)}_{DC}\right) + \frac{1}{k_{DC_i}}\left(U^{(j)}_{DC_i} - U'_{DC,0_i}\right) \tag{13.68}$$

and, similarly to (13.62), superscripts (j) and (k) respectively refer to the inner Newton–Raphson iteration and the outer AC/DC power flow iteration. The Jacobian elements for the voltage droop buses are given by

$$\left(U_{DC_j}\frac{\partial P_{DC,0_i}}{\partial U_{DC_j}}\right)^{(j)} = \left(U_{DC_j}\frac{\partial P_{DC_i}}{\partial U_{DC_j}}\right)^{(j)} \tag{13.69}$$

$$\left(U_{DC_i}\frac{\partial P_{DC,0_i}}{\partial U_{DC_i}}\right)^{(j)} = \left(U_{DC_i}\frac{\partial P_{DC_i}}{\partial U_{DC_i}}\right)^{(j)} + \frac{1}{k_{DC_i}}U^{(j)}_{DC,i} \tag{13.70}$$

13.4.6 DC Slack Bus and Droop Buses Iteration

The AC bus active power injection P_s of the DC slack and droop buses is calculated from its DC power P_{DC} by accounting for the converter losses. As the converter losses from (13.9) depend on the yet unknown converter current, an additional iteration is needed to calculate the active power injection P_s. During this iteration, the grid side voltage $\underline{U}_{s_1}$ and reactive power injection Q_s are kept constant. The value of P_c can iteratively be updated according to

$$P^{(i)}_c = -P^{(k)}_{DC} - P^{(i)}_{loss} \tag{13.71}$$

with the superscripts (i) and (k) respectively referring to the DC slack bus iteration and the outer AC/DC power flow iteration. The converter losses P_{loss} are calculated from (13.9). The previous AC network power flow results are used to provide an initial estimate for the converter losses $P^{(0)}_{loss}$.

Figure 13.12 shows the flow chart of the DC slack bus iteration.

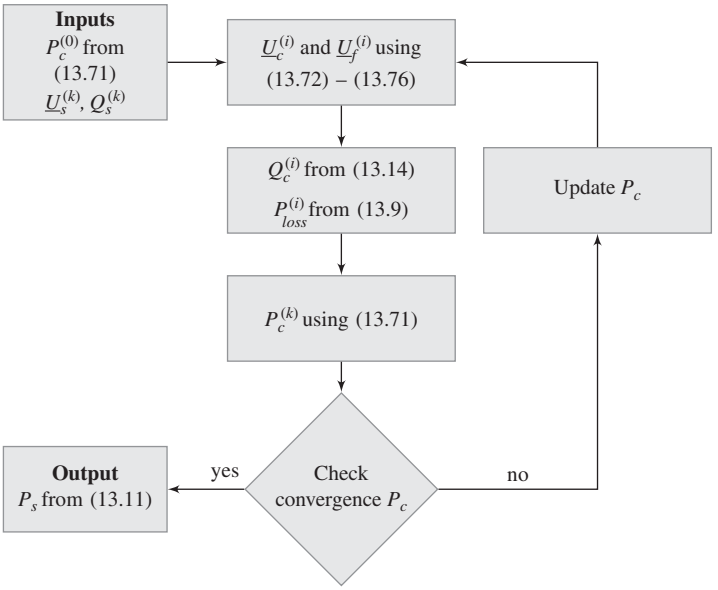

Figure 13.12 DC Slack and droop buses iteration flow chart.

13.4.6.1 Full Model A Newton–Raphson iteration based on $\underline{U}_c$ and $\underline{U}_f$ as variables is internally used to update the converter state in order to obtain a new value for $P_{loss}^{(i)}$,

$$\begin{bmatrix} \left(\frac{\partial P_c}{\partial \theta_c}\right)^{(j)} & \left(\frac{\partial P_c}{\partial \theta_f}\right)^{(j)} & \left(U_c \frac{\partial P_c}{\partial U_c}\right)^{(j)} & \left(U_f \frac{\partial P_c}{\partial U_f}\right)^{(j)} \\ 0 & \left(\frac{\partial Q_s}{\partial \theta_f}\right)^{(j)} & 0 & \left(U_f \frac{\partial Q_s}{\partial U_f}\right)^{(j)} \\ \left(\frac{\partial F_1}{\partial \theta_c}\right)^{(j)} & \left(\frac{\partial F_1}{\partial \theta_f}\right)^{(j)} & \left(U_c \frac{\partial F_1}{\partial U_c}\right)^{(j)} & \left(U_f \frac{\partial F_1}{\partial U_f}\right)^{(j)} \\ \left(\frac{\partial F_2}{\partial \theta_c}\right)^{(j)} & \left(\frac{\partial F_2}{\partial \theta_f}\right)^{(j)} & \left(U_c \frac{\partial F_2}{\partial U_c}\right)^{(j)} & \left(U_f \frac{\partial F_2}{\partial U_f}\right)^{(j)} \end{bmatrix} \cdot \begin{bmatrix} \Delta\theta_c^{(j)} \\ \Delta\theta_f^{(j)} \\ \frac{\Delta U_c}{U_c}^{(j)} \\ \frac{\Delta U_f}{U_f}^{(j)} \end{bmatrix} = \begin{bmatrix} \Delta P_c^{(j)} \\ \Delta Q_s^{(j)} \\ -F_1^{(j)} \\ -F_2^{(j)} \end{bmatrix} \tag{13.72}$$

with the functions F_1 and F_2 given by

$$F_1(\underline{U}_s, \underline{U}_c, \underline{U}_f) = P_{cf} - P_{sf} \tag{13.73}$$

$$F_2(\underline{U}_s, \underline{U}_c, \underline{U}_f) = Q_{cf} - Q_{sf} - Q_f \tag{13.74}$$

The power mismatches $\Delta P_c^{(j)}$ and $\Delta Q_s^{(j)}$ can be calculated by respectively using (13.13) and (13.12) and are given by

$$\Delta P_c^{(j)} = P_c^{(i)} - P_c\left(\underline{U}_f^{(j)}, \underline{U}_c^{(j)}\right) \tag{13.75}$$

$$\Delta Q_s^{(j)} = Q_s^{(k)} - Q_s\left(\underline{U}_s^{(k)}, \underline{U}_f^{(j)}\right) \tag{13.76}$$

The superscript (j) refers to the inner Newton–Raphson iteration. The elements of the Jacobian matrix can be analytically derived from (13.11)–(13.19) directly and by substitution in the expressions for F_1 and F_2:

$$\left(\frac{\partial P_c}{\partial \theta_c}\right)^{(j)} = -Q_c^{(j)} - U_c^{(j)\,2} B_c \tag{13.77}$$

$$\left(\frac{\partial P_c}{\partial \theta_f}\right)^{(j)} = Q_c^{(j)} + U_c^{(j)\,2} B_c \tag{13.78}$$

$$\left(U_c \frac{\partial P_c}{\partial U_c}\right)^{(j)} = P_c^{(j)} + U_c^{(j)\,2} G_c \tag{13.79}$$

$$\left(U_f \frac{\partial P_c}{\partial U_f}\right)^{(j)} = P_c^{(j)} - U_c^{(j)\,2} G_c \tag{13.80}$$

$$\left(\frac{\partial Q_s}{\partial \theta_f}\right)^{(j)} = -P_s^{(j)} - U_s^{(k)\,2} G_{tf} \tag{13.81}$$

$$\left(U_f \frac{\partial Q_s}{\partial U_f}\right)^{(j)} = Q_s^{(j)} - U_s^{(k)\,2} B_{tf} \tag{13.82}$$

$$\left(\frac{\partial F_1}{\partial \theta_c}\right)^{(j)} = Q_{cf}^{(j)} - U_f^{(j)\,2} B_c \tag{13.83}$$

$$\left(\frac{\partial F_1}{\partial \theta_f}\right)^{(j)} = -Q_{cf}^{(j)} + Q_{sf}^{(j)} + U_f^{(j)\,2} (B_c + B_{tf}) \tag{13.84}$$

$$\left(U_c \frac{\partial F_1}{\partial U_c}\right)^{(j)} = P_{cf}^{(j)} + U_f^{(j)\,2} G_c \tag{13.85}$$

$$\left(U_f \frac{\partial F_1}{\partial U_f}\right)^{(j)} = P_{cf}^{(j)} - P_{sf}^{(j)} - U_f^{(j)\,2} (G_c + G_{tf}) \tag{13.86}$$

$$\left(\frac{\partial F_2}{\partial \theta_c}\right)^{(j)} = -P_{cf}^{(j)} - U_f^{(j)}\, G_c \tag{13.87}$$

$$\left(\frac{\partial F_2}{\partial \theta_f}\right)^{(j)} = P_{cf}^{(j)} - P_{sf}^{(j)} + U_f^{(j)\,2} (G_c + G_{tf}) \tag{13.88}$$

$$\left(U_c \frac{\partial F_2}{\partial U_c}\right)^{(j)} = Q_{cf}^{(j)} - U_f^{(j)\,2} B_c \tag{13.89}$$

$$\left(U_f \frac{\partial F_2}{\partial U_f}\right)^{(j)} = Q_{cf}^{(j)} - Q_{sf}^{(j)} + U_f^{(j)\,2} (B_c + B_{tf} + 2B_f) \tag{13.90}$$

with the converter powers from (13.11)–(13.19).

13.4.6.2 Transformerless Model In the absence of the transformer, the active and reactive power injections can be rewritten in terms of $\underline{U}_s$ and $\underline{U}_c$ as

$$P_s = -U_s^2 G_c + U_s U_c [G_c \cos(\theta_s - \theta_c) + B_c \sin(\theta_s - \theta_c)] \tag{13.91}$$

$$Q_s = U_s^2 B_{cf} + U_s U_c [G_c \sin(\theta_s - \theta_c) - B_c \cos(\theta_s - \theta_c)] \tag{13.92}$$

with $B_c + B_f$ abbreviated as B_{cf}. By rewriting Q_s, the Jacobian matrix simplifies to a 2×2 structure retaining $\Delta\delta_c$ and $\frac{\Delta U_c}{U_c}$ as unknowns and retaining the derivates related to the P_c and Q_s equations as Jacobian elements

$$\begin{bmatrix} \left(\frac{\partial P_c}{\partial \theta_c}\right)^{(j)} & \left(U_c \frac{\partial P_c}{\partial U_c}\right)^{(j)} \\ \left(\frac{\partial Q_s}{\partial \theta_c}\right)^{(j)} & \left(U_c \frac{\partial Q_s}{\partial U_c}\right)^{(j)} \end{bmatrix} \begin{bmatrix} \Delta\theta_c^{(j)} \\ \frac{\Delta U_c}{U_c}^{(j)} \end{bmatrix} = \begin{bmatrix} \Delta P_c^{(j)} \\ \Delta Q_s^{(j)} \end{bmatrix} \tag{13.93}$$

with $\left(\frac{\partial P_c}{\partial \theta_c}\right)^{(j)}$ and $\left(U_c \frac{\partial P_c}{\partial U_c}\right)^{(j)}$ given by expressions (13.77) and (13.79). The other elements of the reduced Jacobian matrix are given by

$$\left(\frac{\partial Q_s}{\partial \theta_c}\right)^{(j)} = -P_s^{(j)} - U_s^{(k)\,2} G_c \tag{13.94}$$

$$\left(U_c \frac{\partial Q_s}{\partial U_c}\right)^{(j)} = Q_s^{(j)} - U_s^{(k)\,2} B_{cf} \tag{13.95}$$

with P_s, Q_s from (13.91)–(13.92) and P_c, Q_c from (13.13) – (13.14) with $\underline{U}_f$ replaced by $\underline{U}_s$.

13.4.6.3 Reduced Model (Without Filter) In the absence of the converter filters, the equations can be reduced by lumping together the transformer and converter impedance in $\underline{Z}_c$ (Figure 13.7c), resulting in the forms

$$\begin{bmatrix} \left(\frac{\partial P_c}{\partial \theta_c}\right)^{(j)} & \left(U_c \frac{\partial P_c}{\partial U_c}\right)^{(j)} \\ \left(\frac{\partial Q_s}{\partial \theta_c}\right)^{(j)} & \left(U_c \frac{\partial Q_s}{\partial U_c}\right)^{(j)} \end{bmatrix} \begin{bmatrix} \Delta\theta_c^{(j)} \\ \frac{\Delta U_c}{U_c}^{(j)} \end{bmatrix} = \begin{bmatrix} \Delta P_c^{(j)} \\ \Delta Q_s^{(j)} \end{bmatrix} \tag{13.96}$$

with the elements of the Jacobian matrix given by

$$\left(\frac{\partial P_c}{\partial \theta_c}\right)^{(j)} = -Q_c^{(j)} - U_c^{(j)\,2} B_c \tag{13.97}$$

$$\left(U_c \frac{\partial P_c}{\partial U_c}\right)^{(j)} = P_c^{(j)} + U_c^{(j)\,2} G_c \tag{13.98}$$

$$\left(\frac{\partial Q_s}{\partial \theta_c}\right)^{(j)} = -P_s^{(j)} - U_s{}^2 G_c \tag{13.99}$$

$$\left(U_c \frac{\partial Q_s}{\partial U_c}\right)^{(j)} = Q_s^{(j)} - U_s{}^2 B_c \tag{13.100}$$

with values for P_s, Q_s, P_c, and Q_c from (13.20)–(13.23). As pointed out in Section 13.3, this reduced model is sufficient in most practical cases. This especially holds when MMC converters with very low AC filter requirements are considered.

13.5 SOFTWARE IMPLEMENTATION

The advantage of using a sequential approach, as described in this chapter, is that the models can relatively easy be combined with existing AC power flow software. As an example, the program MATACDC is shortly discussed here. MATACDC allows the study of the steady-state interactions between multiple nonsynchronized AC grids and DC systems based on VSC HVDC technology. Besides regular power flow models, a variety of converter models and control representations, such as DC voltage droop control have been included, as well as a number of DC system contingencies (e.g., converter outages), which makes the program ideally suited for researchers and students working in the emerging field of HVDC grids. The program is freely available on the internet [10] and a fully documented user manual [11] and source code are provided. MATACDC is fully compatible with the power flow routines in MATPOWER [12], which is available online [13]. The program has a similar syntax, code structure and command line usage, which makes its use straightforward for persons who are already familiar with MATPOWER.

Figure 13.13 shows the program flow structure of MATACDC, as an example. The power flow algorithm sequentially solves the AC and DC system power flow, thereby respectively keeping all converter powers and voltages constant.

13.6 TEST CASE

As an example, results on the CIGRE DC Grid benchmark test system [14] are shown in Figure 13.14, for a converter outage of the offshore wind farm converter connected to bus Bb-D1. The HVDC networks consist of a symmetric monopolar link (±200 kV), a meshed 5-terminal bipolar HVDC grid (±400 kV), and a symmetric monopolar radial multi-terminal system with four converters (±200 kV). The networks consist of both overhead lines and cables. The three AC networks Ba-A0 to Ba-A1, Ba-B0 to Ba-B3, and Bo-C1 to Bo-C2 have operating voltages of respectively 380 kV, 380 kV, and 145 kV. Buses Ba-A0, Ba-B0, and Bo-C1 have been chosen as the AC slack nodes for the different AC grids. The converter connected to Bm-A1 is under constant DC voltage control (slack node), and the AC/DC converters connected to Bm-C1, Bb-C2, Bb-D1, Bm-E1, and Bm-F1 have a constant active power injection. All

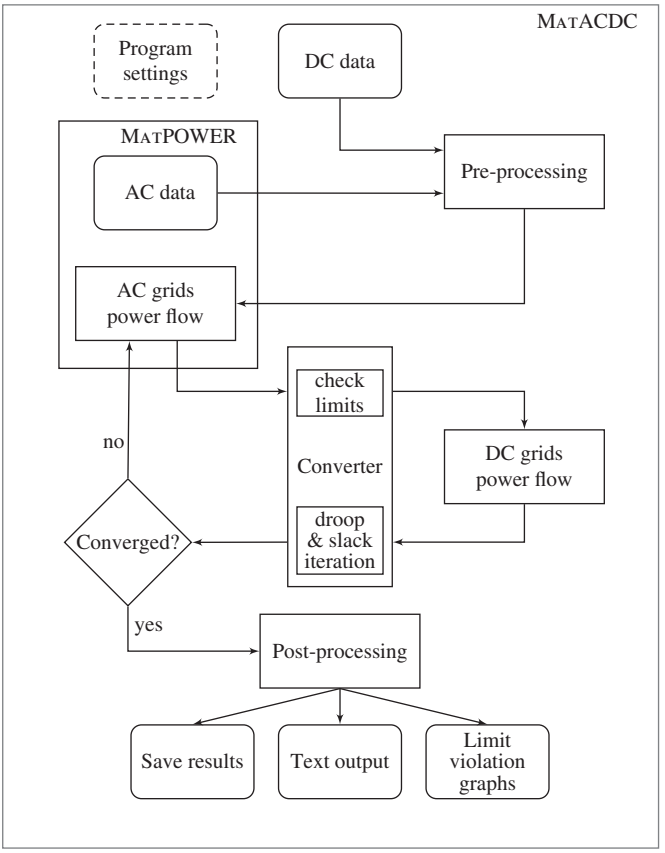

Figure 13.13 MATACDC program flow.

remaining converters have a power–voltage droop. The picture shows the overall control response of these droop-controlled converters to an outage of converter Bb-D1.

13.7 CONCLUSIONS

This chapter discussed the power flow of a combined AC/DC system. In its most simple form, the converters can be modeled as power injections to the AC system with coupled active power injections and independent reactive power setpoints. When the actual state of the HVDC system is of interest, a more accurate representation of the DC grid is needed. For steady-state purposes, the converter can generally be represented as a complex voltage source behind an impedance. In more elaborated models, the filters and transformers have to be modeled separately, which influences the converter's capability chart. The detailed models described in this chapter include the converter losses, and limits and allow for various representations of converters, either including transformers and/or filters. The power flow equations for the DC grid

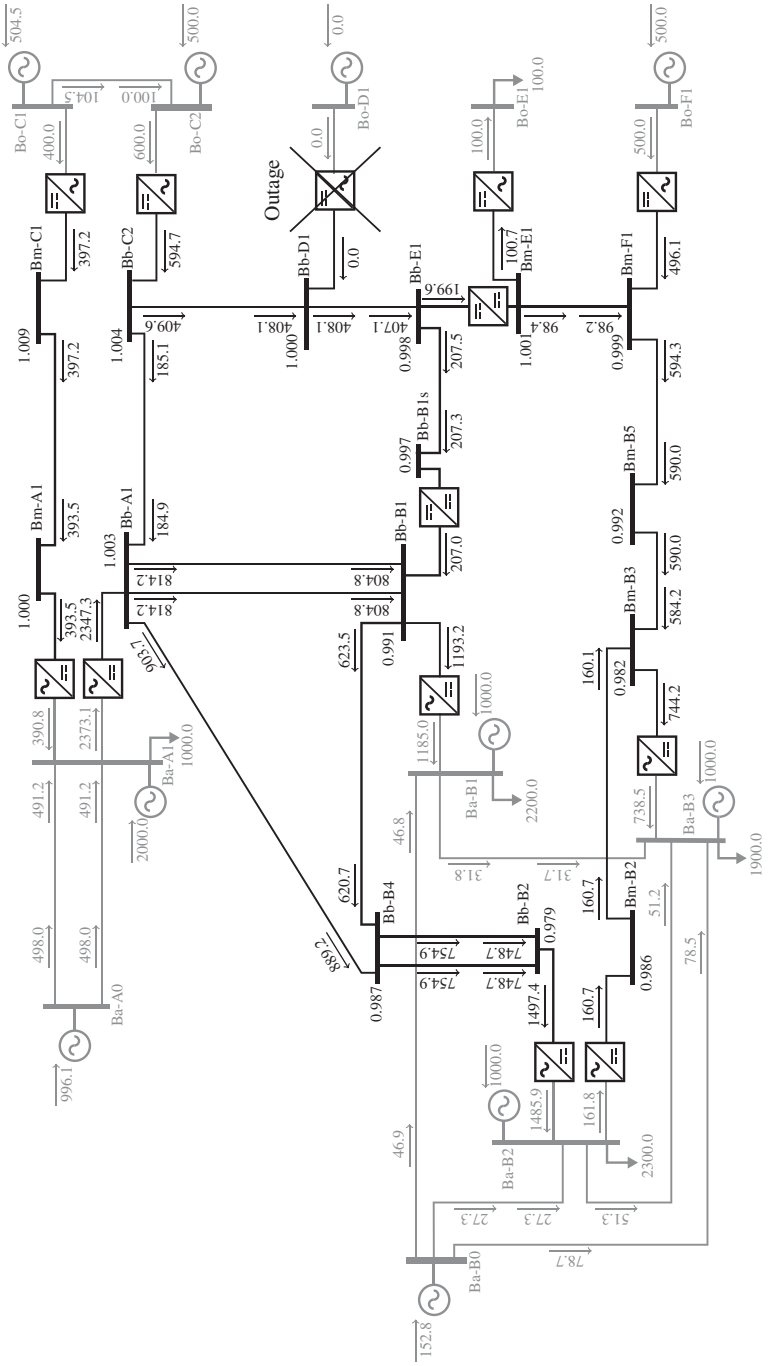

Figure 13.14 MATACDC power flow solution of a mixed AC/DC test system, the CIGRE DC grid benchmark test system with an outage of converter at bus Bb-D1.

were derived for various converter control representations, including constant active power, voltage droop, and constant DC voltage. Combining these different control representations in an HVDC grid allows us to study the overall system effect of these controls on the power flows in the AC/DC system.

REFERENCES

1. A. El-Abiad and G. Stagg, *Computer Methods in Power System Analysis. Stagg*. New York: McGraw-Hill, 1968.
2. J. Grainger and W. Stevenson, *Power System Analysis*, McGraw-Hill Series in Electrical and Computer Engineering: Power and Energy. New York: McGraw-Hill, 1994.
3. G. Daelemans, K. Srivastava, M. Reza, S. Cole, and R. Belmans, "Minimization of steady-state losses in meshed networks using VSC HVDC," in *Proceedings IEEE PES GM 2009*, Calgary, Canada, July 26–30, 2009.
4. S. Johansson, G. Asplund, E. Jansson, and R. Rudervall, "Power system stability benefits with VSC DC-transmission systems," in *Proceedings CIGRÉ 2004 Session*, Paris, France, 2004, 8 pages.
5. M. P. Bahrman and B. K. Johnson, "The ABCs of HVDC transmission technologies," *IEEE Power Energy Magazine*, vol. 5, no. 2, pp. 32–44, 2007.
6. G. P. Adam, O. Anaya-Lara, and G. Burt, "Steady-state and transient performance of DC transmission systems based on HVDC technology," in *Proceedings IET ACDC 2010*, London, UK, Oct. 20–21, 2010, 5 pages.
7. A. Pizano-Martinez, C. R. Fuerte-Esquivel, H. Ambriz-Perez, and E. Acha, "Modeling of VSC-based HVDC systems for a Newton-Raphson OPF algorithm," *IEEE Trans. Power Syst.*, vol. 22, no. 4, pp. 1794–1803, Nov. 2007.
8. X.-P. Zhang, "Multiterminal voltage-sourced converter-based HVDC models for power flow analysis," *IEEE Transactions on Power Systems*, vol. 19, no. 4, pp. 1877–1884, Nov. 2004.
9. M. Baradar and M. Ghandhari, "A multi-option unified power flow approach for hybrid AC/DC grids incorporating multi-terminal VSC-HVDC," *IEEE Transactions on Power Systems*, vol. 28, no. 3, pp. 2376–2383, Aug. 2013.
10. MatACDC website [Online]. Available: http://www.esat.kuleuven.be/electa/teaching/matacdc/
11. *MatACDC 1.0 User's Manual*, University of Leuven (KU Leuven) Department of Electrical Engineering (ESAT), Division ELECTA, Heverlee-Leuven, Belgium.
12. R. D. Zimmerman, C. E. Murillo-Sanchez, and R. J. Thomas, "MATPOWER: Steady-state operations, planning, and analysis tools for power systems research and education," *IEEE Transactions on Power Systems*, vol. 26, no. 1, pp. 12–19, Feb. 2011.
13. MATPOWER website. [Online]. Available: http://www.pserc.cornell.edu/matpower/
14. T. K. Vrana, S. Dennetière, Y. Yang, J. Jardini, D. Jovcic, and H. Saad, "The CIGRE B4 DC grid test system," *ELECTRA*, no. 270, pp. 10–19, 2013.